DU-HA® HUMPSTOR

70200

Installation Instructions

DU-HA Humpstor (For trucks with Tonneau Cover)

Tools Needed:

- // Hex Key Wrench 1/8"
- // 2 Open-End Wrenches - 1/2"
- // Socket - 1/2"
- // Wrench or Socket - 3/8"
- // Wrench or Socket - 7/16"
- // Hex Key Wrench 7/32"

Installation Instructions:

STEP 1 - Attach Handle

Place Handle (B) over holes in Lid Top. Insert two Bolts #10 x 1" (M) through Handle (B), Flat Washer - #10 (N) and Humpstor Lid (A). Secure with Flat Washer - #10 (N) and Lock Nut #10 (O) Use 1/8" Hex Key Wrench. Note: Handle may already be installed.

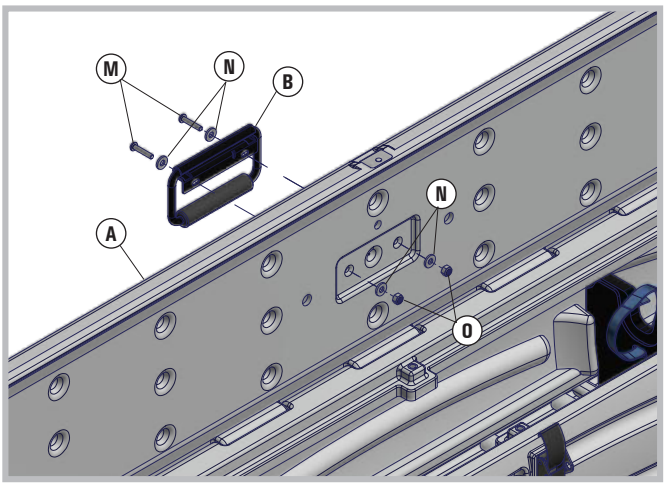

STEP 2 - Attach Support Angle

Attach Humpstor Support Angle (AD) to the bottom of the Humpstor (A). The Humpstor Support Angle can be attached to either side on the bottom of the Humpstor (A). It works best if it is positioned on the opposite side of where the Humpstor Support Brackets (E) attach to the bed rail of the truck. Attach the Humpstor Support Angle (AD) to the bottom of the Humpstor (A) using two Spacers - 3/8" (AC) positioned in between the Humpstor (A) and the Humpstor Support Angle (AD) secure using Hex Bolt - 1/4 x 1 (AB), 1/4 - Washer (S) and 1/4 Lock Washer (T) on each end of Humpstor (A), leave bolts loose until you attach the Humpstor Support Brackets (E).

NOTE: Make sure the slots in the middle of the Humpstor Support Angle (AD) line up with the inserts in the middle of the bottom of the Humpstor (A).

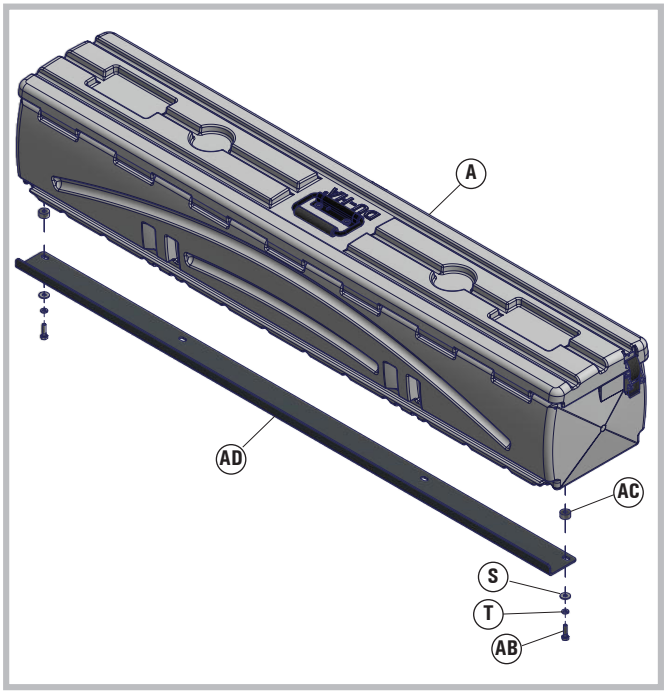

STEP 3 - Assemble Rail Clamps

Assemble Rail Clamp set (F) by sliding A and B parts of the clamps together and insert the Bolt Button Head 3/8" x 1-1/2" (Y) through the top slot on part A and thread into threaded hole on part B. Leave clamp loose so you can slide it onto the rail of the truck.

Note: If you are using the optional Toyota / Nissan Installation Kit or the optional Topper Installation Kit no clamp assembly is required.

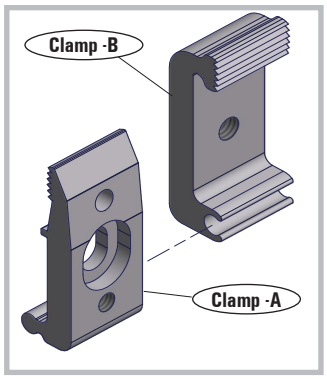

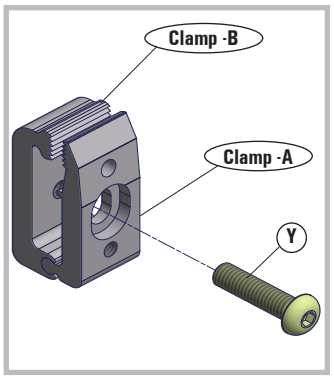

STEP 4 - Attach Stabilizer Foot

Install Stabilizer Foot

Attach one Stabilizer Foot (I) to Support Brackets (E) by threading one Flange Nut - 5/16" (P) onto Stabilizer Foot (I) shaft and insert through the lower hole of each Bracket or slot above bottom hole. Thread a second Flange Nut (P) onto Stabilizer Foot (K) shaft sandwiching the Bracket in between.

Hint: Flanged side of nuts should face Bracket.
Note: Finger tighten.

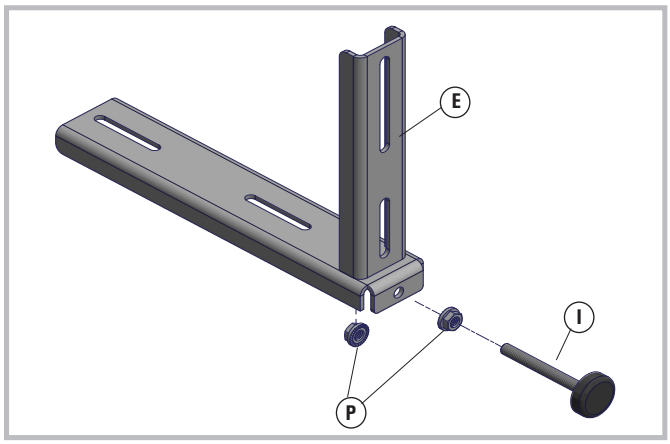

Extended Stabilizer Foot

Some installations require a longer Stabilizer Foot (I) (Toyota Tundra for example). In such cases, prior to installing the Stabilizer Foot (I), attach one Hex bolt - 5/16" x 2" (U) and Coupling Nut - 5/16" (X) to each Stabilizer Foot (I).

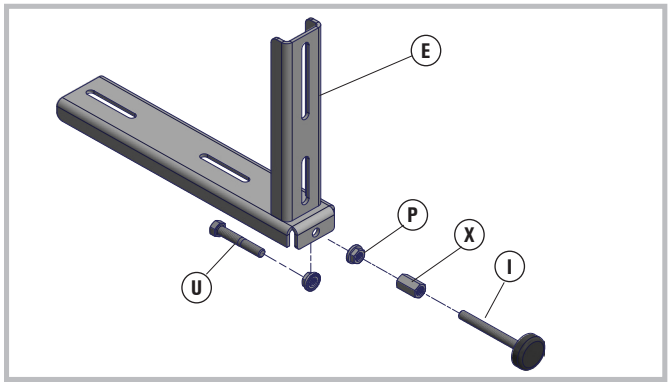

STEP 5 - Assemble Brackets

Option I - Topper or Open Bed Mount

Use this option for most standard installations for open truck beds or for use with toppers. No additional Drop Down Plates (G) required. Use the standard Support Brackets (E).

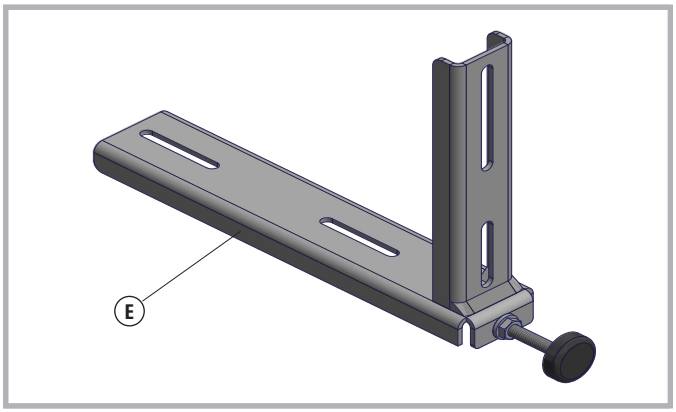

Option II - Roll-up, Fold-up, or Hard Cover

Attach Drop-Down Plate (G) to Support Brackets (E) with two Carriage Bolts - 5/16" x 3/4" (L), two Flat Washers 5/16" (V) and two Lock Nuts 5/16" (W).

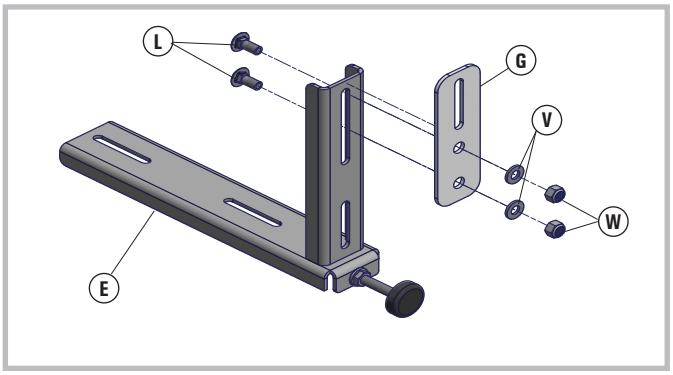

STEP 6 - Attach Rail Clamps to Truck

Look at your bed rail to determine where to attach your rail clamps, find locations where you can attach the clamps at the below spacing and still have room to operate the end latches on the Humpstor. Attach Rail Clamps (F) to truck bed rail by sliding clamps onto truck bed rail from the bottom of the rail, slide onto rail as far as possible. Secure to rail using Bolt Button Head 3/8" x 1-1/2" (Y) tighten firmly with 7/32" Hex Key Wrench, make sure to keep clamps vertical and position at 24" center to center. For a more secure connection you can drill a hole through your truck bed rail, use the top hole in the clamp as a guide. Use the provided 1/4 x 1-3/4" hex bolt (AE) and nylock nut (AF) to secure clamp to bed rail.

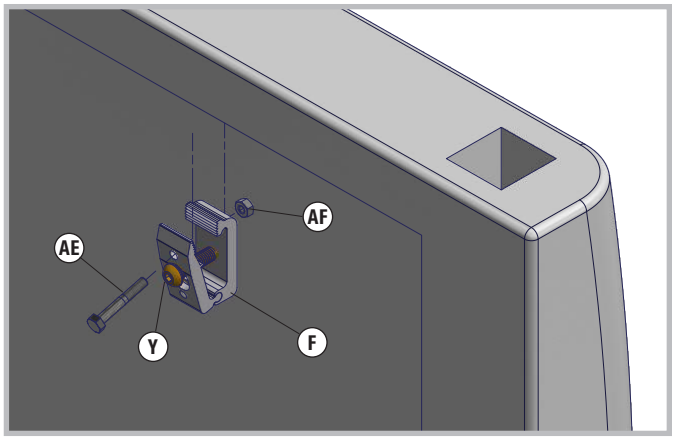

Optional Installation Kit: 70251 - Hardware Package for Trucks with Toppers

STEP 7 - Attach Brackets to Rail Clamps

Attach Support Brackets to Rail Clamps (F) using Hex Bolt 5/16" x 3/4" (Q), Flat Washer 5/16" (V), Lock Washer 5/16" (Z), using one per Rail Clamp set (F), thread into bottom hole in Rail Clamp, as shown below in view **(a)**. Determine where you want the top of the Humpstor to be positioned and position the support brackets (E) 10" below that position to the bottom of the brackets (E) where the Humpstor sits, as shown below in view **(b)**.

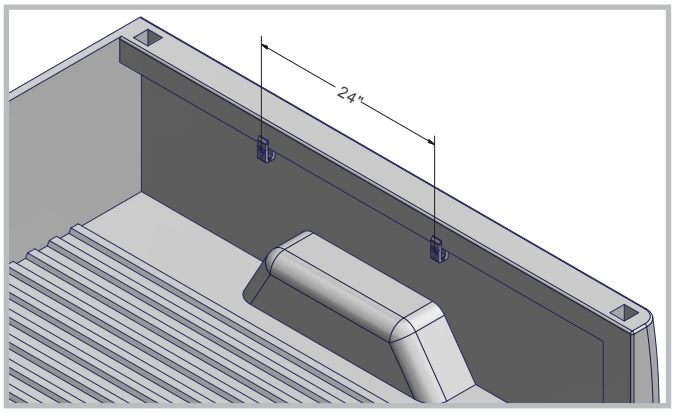

Level bracket assembly by adjusting each Stabilizer Foot (I) to contact the side of the truck box, try to have Stabilizer Foot contact a flat surface.

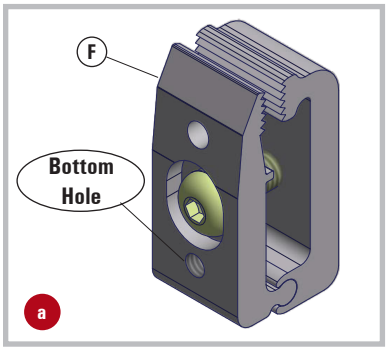

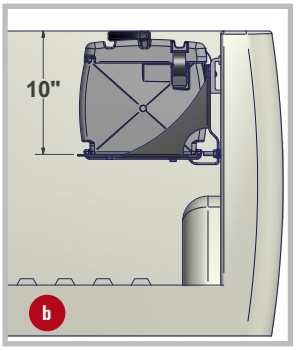

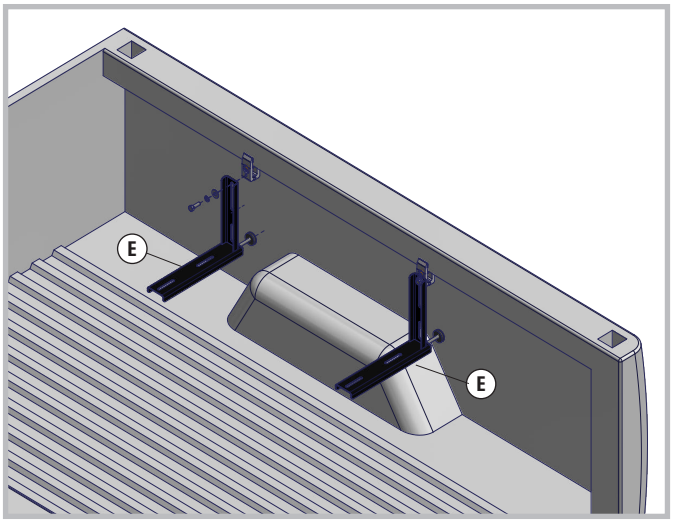

STEP 8 - Attach Humpstor to Brackets

Humpstor Positions

The Humpstor can be mounted with the lid opening toward the inside of the truck bed **(a)** or with the lid opening toward the outside of the truck bed **(b)**. The assembly steps and hardware are the same other than the orientation of the Humpstor.

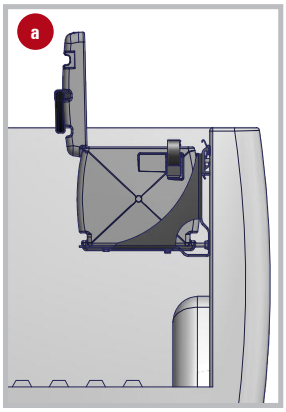

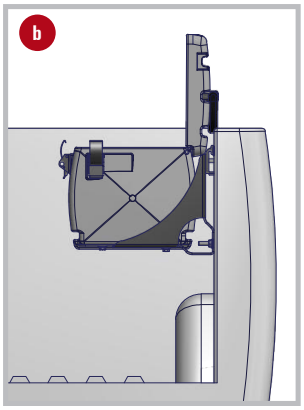

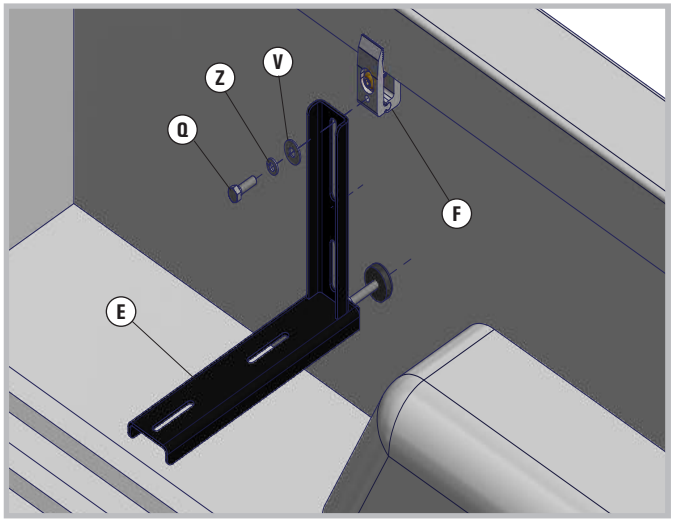

Humpstor Attachment

Place the Humpstor (A) onto the Support Brackets. Thread one Hex Bolt - 1/4" x 5/8" (R), Lock Washer - 1/4" (T) and Flat Washer 1/4" (S) through bottom slots of the Support Brackets (E), through the slot in the Humpstor Support Angle (AD) and into the threaded holes in the bottom of the Humpstor, located below the slots for the Foam Organizer / Gun Holder (as shown). After you tighten the bolts tighten the previously installed bolts on the Humpstor Support Angle (AD).

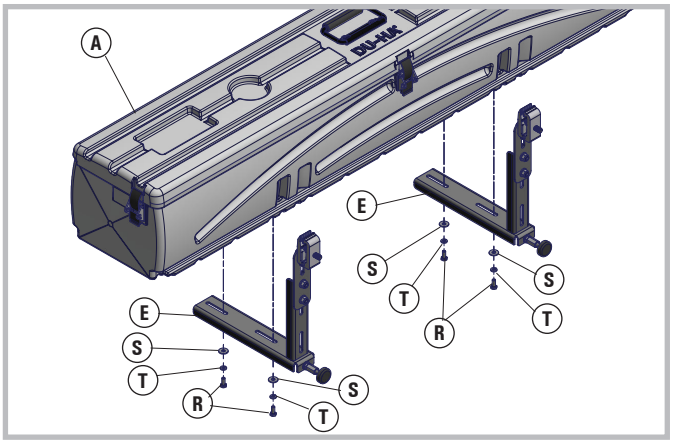

Humpstor Adjustment

Slide Humpstor in or out to desired position. For example, in a roll-up cover the Humpstor should be slid away from the side rail of the truck bed to allow the lid to open; for open-bed, the Humpstor should be as close as possible to the bed rail of the truck.
To adjust the Humpstor vertically loosen the Clamp Bracket hex bolt 5/16" x 3/4" (Q). Slide the Brackets up/down as needed along the slot in the Brackets or Drop-Down Plates. Make sure Humpstor is level, then tighten all hardware connections.

Note: Humpstor should be adjusted as high and as close to the rail as possible while still allowing the lid to open properly.

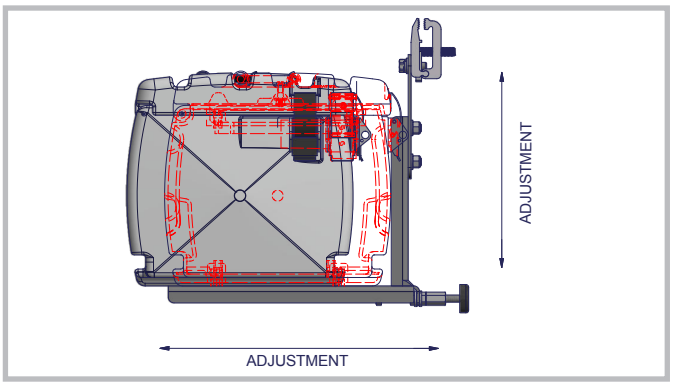

STEP 9 - Install Organizer / Gun Holders

Foam Organizer / Gun Holders / Stiffeners

Sandwich each Foam Organizer / Gun Holder (C) in between two Plastic Stiffeners (D). Place each Foam Organizer / Gun Holder / Stiffener assembly into the channel slots in the side walls of the Humpstor (A), facing opposing directions.
Note: You may have to flex the assembly to get it into place.
(Hint – Stock of gun should rest in large groove; barrel should rest in small groove.)

Velcro Straps

To secure guns in the Humpstor, loop each Velcro Strap (J) through the holes in the top of the Foam Organizer / Gun Rack (C) / Stiffener (D) assembly. Wrap the Velcro Strap around the gun, then attach the Velcro Strap to itself and make sure it is securely fastened.
Note: Proper use of Velcro Straps helps prevent guns from bouncing on rough terrain.

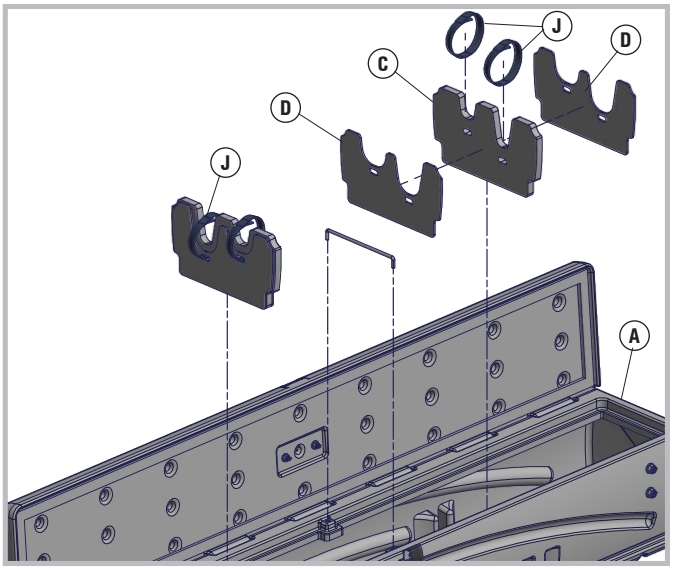

Center Brace

To maximize strength and stability, use the Center Brace (H). Insert each end into the hole on the top lip of the Humpstor (A) at the middle. To access cargo while using the Center Brace, lift one end out of the hole and rotate the Center Brace out of the way. Return Center Brace to hole when finished.

Locking the Humpstor

To lock Humpstor, use one or more standard padlocks. Insert lock through the latch hole.
Note: Lock only needs to go through one hole in the latch.
Note: The Middle Latch does not need to be latched to secure lid.
Note: Lid may need to be pressed down in order to close the latches when the seal is new. Once the seal has formed to the lid it should close on its own.

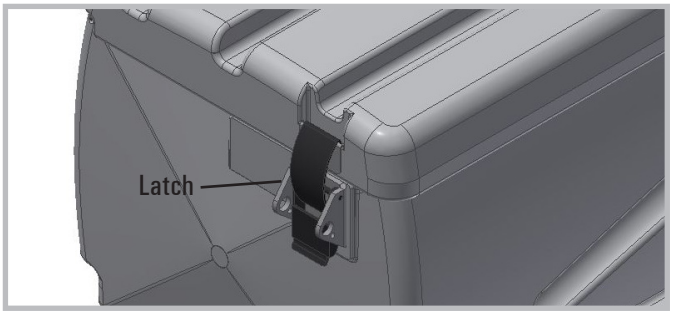

Safety Instructions:

Warning: 75 LBS CAPACITY – DO NOT EXCEED 75 POUNDS OF CARGO IN THE HUMPSTOR. CAUTION – Do not store explosives or hazardous materials in the HUMPSTOR.
Do not place loaded guns in the HUMPSTOR.
For further instructions refer to the vehicle owners manual or contact DU-HA, Inc.

Exploded View / Parts List

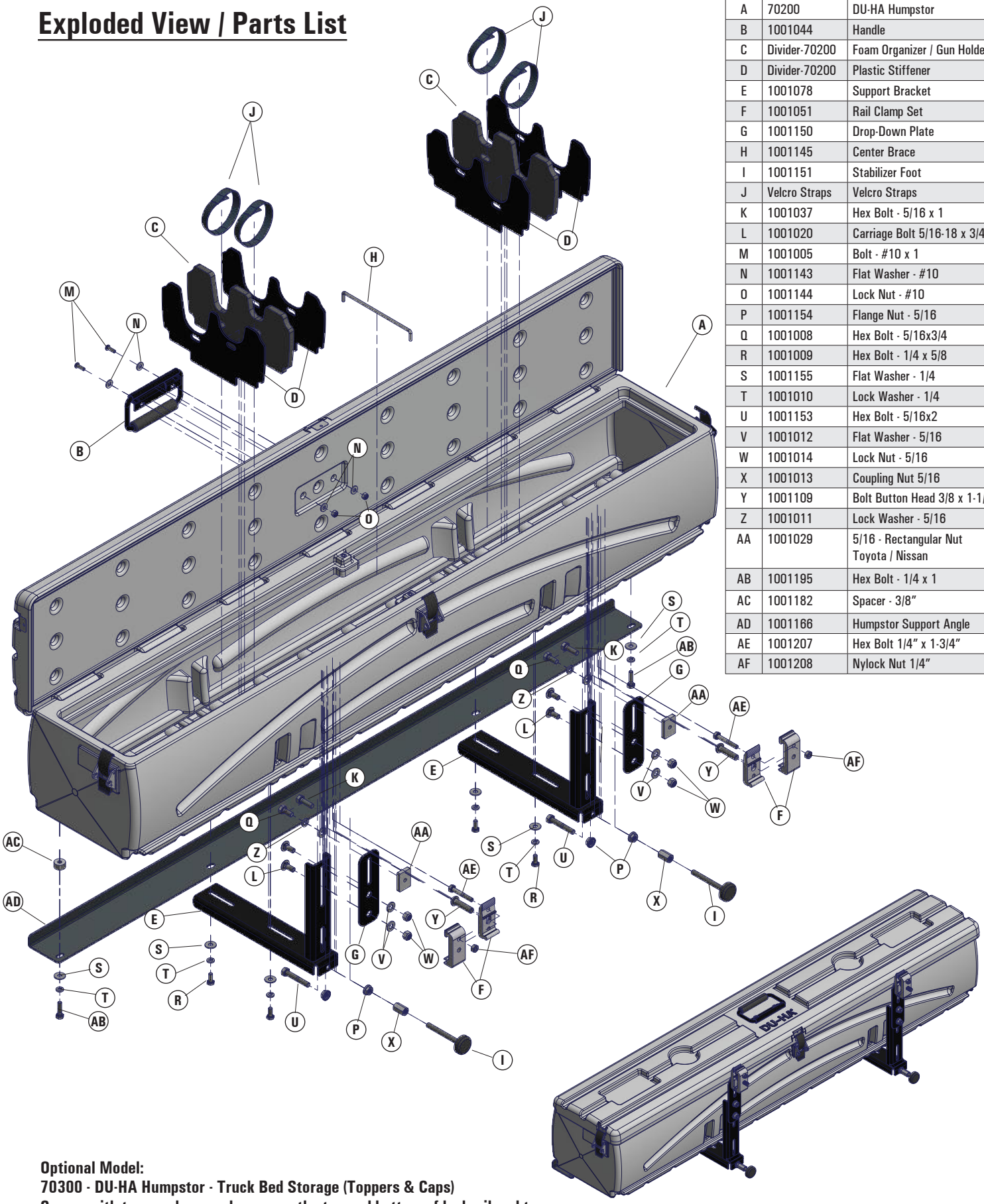

Part	Part Number	Description	Qty
A	70200	DU-HA Humpstor	1
B	1001044	Handle	1
C	Divider-70200	Foam Organizer / Gun Holder	2
D	Divider-70200	Plastic Stiffener	4
E	1001078	Support Bracket	2
F	1001051	Rail Clamp Set	2
G	1001150	Drop-Down Plate	2
H	1001145	Center Brace	1
I	1001151	Stabilizer Foot	2
J	Velcro Straps	Velcro Straps	4
K	1001037	Hex Bolt - 5/16 x 1	2
L	1001020	Carriage Bolt 5/16-18 x 3/4	4
M	1001005	Bolt - #10 x 1	2
N	1001143	Flat Washer - #10	4
O	1001144	Lock Nut - #10	2
P	1001154	Flange Nut - 5/16	4
Q	1001008	Hex Bolt - 5/16x3/4	2
R	1001009	Hex Bolt - 1/4 x 5/8	4
S	1001155	Flat Washer - 1/4	6
T	1001010	Lock Washer - 1/4	6
U	1001153	Hex Bolt - 5/16x2	2
V	1001012	Flat Washer - 5/16	6
W	1001014	Lock Nut - 5/16	4
X	1001013	Coupling Nut 5/16	2
Y	1001109	Bolt Button Head 3/8 x 1-1/2	2
Z	1001011	Lock Washer - 5/16	2
AA	1001029	5/16 - Rectangular Nut Toyota / Nissan	2
AB	1001195	Hex Bolt - 1/4 x 1	2
AC	1001182	Spacer - 3/8"	2
AD	1001166	Humpstor Support Angle	1
AE	1001207	Hex Bolt 1/4" x 1-3/4"	2
AF	1001208	Nylock Nut 1/4"	2

Optional Model:
70300 - DU-HA Humpstor - Truck Bed Storage (Toppers & Caps)
Comes with topper clamps, clamp over the top and bottom of bed rail and topper.

Note: You may have extra parts leftover, depending on your trucks installation option.